TesPro® Since2002

One World One Tespro

TG-104

Industrial Gateway Datasheet



TG-104 industrial gateway is independently developed and manufactured by Tespro. It integrates Wi-Fi, a built-in 4G cellular module, IoT interfaces, and VPN technology to provide secure and reliable connectivity for IoT applications. Powered by TesproOS with a Web management interface, it supports device monitoring, configuration, protocol management, and remote maintenance in complex network environments.

TG-104 supports 100Mbps Ethernet, 4G WAN access, 2 × GPIO interfaces, serial communication, Modbus/BACnet gateways, and energy management functions. It provides flexible connectivity and reliable communication solutions for IoT deployments and industrial automation applications.



CE RoHS COMPLIANT

- Global Network Adaptation
  2G / 3G / 4G
- 1*WAN + 1*LAN
  10/100 Mbps
- Wi-Fi 4：802.11b/g/n
- 1*RS485 / 1*RS232 (Optical)
  2*GPIO

Tespro Electronics
https://www.tespro.com
Email: info@tespro.com / sales@tespro.com
Mobile/WhatsApp: +852-4609 4648, +1-213 610 4797, +86-13928019921
We have branches in China, the USA, the UK, Australia, Singapore, and Hong Kong. If you encounter any agents, please contact us first for verification.

© 2026 Tespro. All rights reserved. Product specifications are subject to change without notice.

Typical application scenarios



Applied Topology

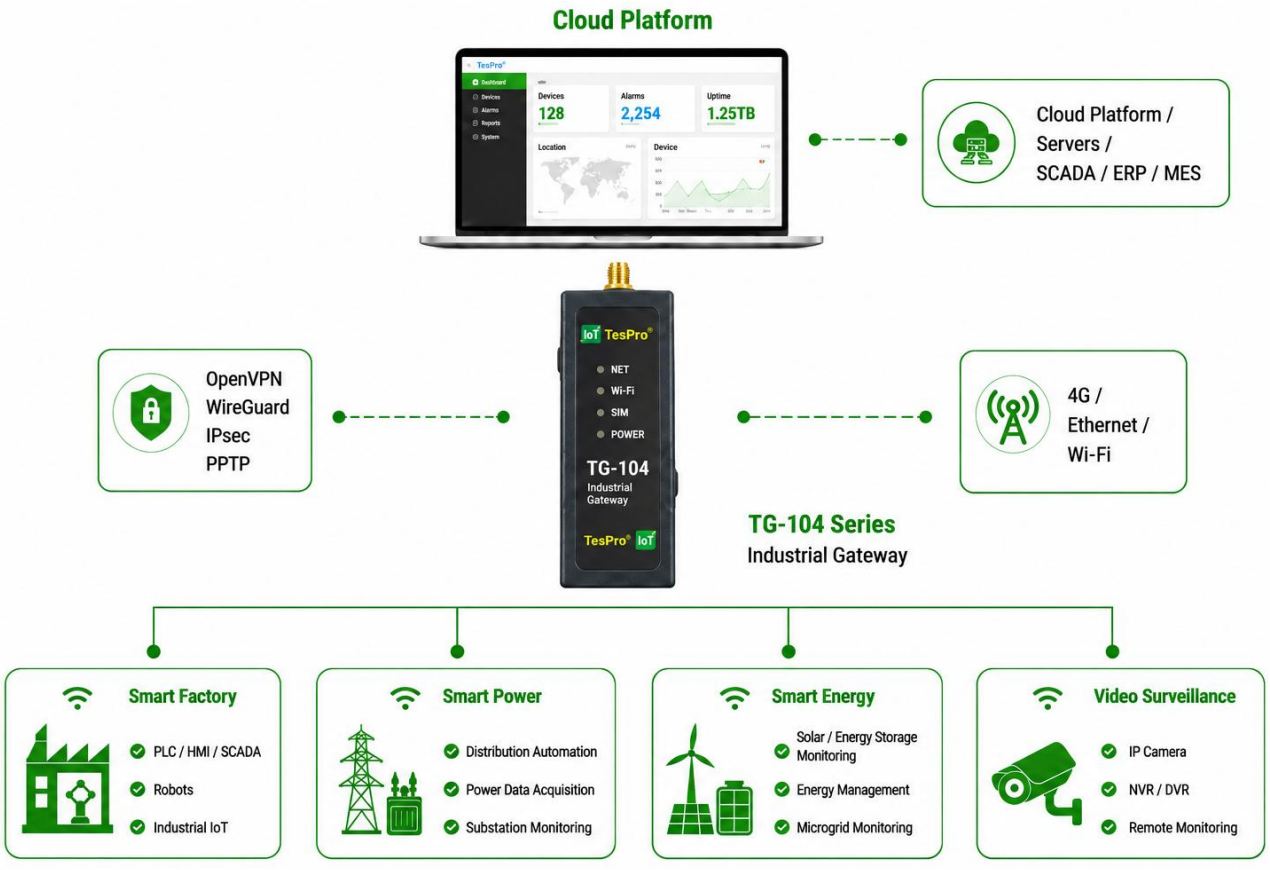

Tespro Electronics
https://www.tespro.com
Email: info@tespro.com / sales@tespro.com
Mobile/WhatsApp: +852-4609 4648, +1-213 610 4797, +86-13928019921
We have branches in China, the USA, the UK, Australia, Singapore, and Hong Kong. If you encounter any agents, please contact us first for verification.

© 2026 Tespro. All rights reserved. Product specifications are subject to change without notice.

Core Advantages

2G/3G/4G cellular networks

Supports 2G/3G/4G cellular networks, with Cat.1 & Cat.4 for 4G access. Dual SIM and dual eSIM enable flexible network switching and link redundancy.

100M Ethernet Interface + Wi-Fi

Equipped with 100Mbps Ethernet ports supporting WAN/LAN auto-sensing and Wi-Fi 4 (2.4GHz), the device provides reliable wired and wireless connectivity for industrial networking and data transmission.

Integrated serial GPIO interfaces

Integrates one serial port supporting either RS232 or RS485 (selectable) and 2 × GPIO interfaces, enabling flexible device connectivity, I/O control, and reliable industrial data communication.

TesproOS System with an Extensive Protocol Library

Powered by TesproOS, the device supports major industrial protocols including Modbus, BACnet, OPC UA, PROFINET, EtherNet/IP, and MQTT, with flexible private protocol customization.

Remote O&M

Based on TesproOS, the device supports real-time monitoring, remote configuration, fault diagnosis, and batch OTA firmware upgrades, reducing on-site maintenance and troubleshooting costs.

Excellent weather resistance

Operates reliably from –40°C to +75°C with 5%–95% RH non-condensing humidity. Designed for harsh industrial environments, including high-altitude and extreme operating conditions.

Features

Performance & Hardware

- 32-bit single-core processor, 580 MHz clock speed
- 128MB DDR3 RAM + 32 MB Flash; supports up to 64 MB RAM (optional)
- Standard MiniPCIe and M.2 slots; compatible with global 2G / 3G / 4G cellular networks
- MicroSD card slot supporting up to 128 GB storage expansion (optional)

Interfaces & Connectivity

- Two 100 Mbps Ethernet ports (1 LAN + 1 WAN)
- Built-in lightning protection with 3 kV electromagnetic isolation
- Supports Wi-Fi 4 (2.4GHz) with a maximum speed of 300Mbps.; supports AP/Client modes
- 1 serial port（RS232 / RS485）, with high-voltage isolation
- 2 × GPIO interfaces for flexible industrial I/O control
- Supports Cellular / Wi-Fi / Ethernet WAN link backup and ICMP probing

Protocols & Applications

- Modbus RTU/TCP gateway with MQTT/TCP/UDP/HTTP northbound communication
- BACnet gateway supporting BACnet/IP and BACnet MS/TP southbound data acquisition
- IPsec, OpenVPN, GRE, L2TP, PPTP, DMVPN and WireGuard
- Real-time energy consumption monitoring and multi-device alerts

Security & Networking

- Built-in TesproOS, enabling secure remote access, O&M, protocol management, and rapid mobile configuration
- Industrial-grade firewall with zone-based security policies
- Application-layer traffic identification (NetCtrl/DPI engine)
- Supports network functions such as DDNS, VRRP, DHCP Server, and IP Passthrough
- Event alert methods: SMS, Email, DO, SNMP Trap

Reliability & Protection

- Automatic network disconnection detection with auto-reboot upon dial-up failure or on a scheduled basis
- OTA — Multiple remote firmware upgrade methods
- 12–36 VDC / 3 A with automatic over-voltage cutoff protection
- Reverse polarity, surge and ESD protection

Management & Development

- proprietary TesproOS (Linux) and provides support for SDK and app development.
- Web management interface with support for switching between dark and light themes

Tespro Electronics
https://www.tespro.com
Email: info@tespro.com / sales@tespro.com
Mobile/WhatsApp: +852-4609 4648, +1-213 610 4797, +86-13928019921
We have branches in China, the USA, the UK, Australia, Singapore, and Hong Kong. If you encounter any agents, please contact us first for verification.

© 2026 Tespro. All rights reserved. Product specifications are subject to change without notice.

TesproOS



Protocol Support



Tespro Electronics
https://www.tespro.com
Email: info@tespro.com / sales@tespro.com
Mobile/WhatsApp: +852-4609 4648, +1-213 610 4797, +86-13928019921
© 2026 Tespro. All rights reserved. Product specifications are subject to change without notice.
We have branches in China, the USA, the UK, Australia, Singapore, and Hong Kong. If you encounter any agents, please contact us first for verification.

Hardware Specifications

Category	TG-104
Hardware System	
CPU	32-bit single-core processor, 580 MHz clock speed
RAM	128 MB, DDR3
FLASH	32 MB
Network Interfaces	
Ethernet Ports	2 x 10/100 Mbps Ethernet ports
Cellular Network	4G LTE：Cat1 / Cat4
WAN	1 x WAN 10 / 100 Mbps
LAN	1 x LAN 10 / 100 Mbps
SIM Card Slot	Dual SIM / Dual eSIM / 1 SIM + 1 eSIM
Antenna	SMA male (plug); antenna ports: 2
Physical Interfaces	
Grounding Terminal	1 × Grounding Screw
Status LEDs	4
Reset Button	1
Industrial Interfaces	
Serial Ports	1 x RS485 / 1 x RS232 (Optical), 3 kV high-voltage isolation
I/O Interfaces	2 × GPIO, configurable as DI/DO
Wi-Fi / WLAN	
Wi-Fi Frequency	2.4GHz
Protocol Standards	Wi-Fi 4：802.11b/g/n
Maximum Transmission Rate	N300
Data Rate	802.11b/g/n: up to 300 Mbps;
Transmit Power	802.11b:16dBm+/-2dBm(11Mbps)；802.11g:16dBm+/-2dBm(54Mbps)；802.11n@2.4GHz:16dBm +/-2dBm(HT20MCS7)；802.11n@2.4GHz:16dBm +/-2dBm(HT40MCS7)
Transmission Distance	Line-of-sight <= 100 m (actual transmission distance depends on the site environment)
Power Supply	
Power Connector	1 x DC power connector (DC 2.1)
Input Voltage Range	DC input: 12-36 V; reverse-polarity protection supported
Standby Power	120mA–200mA @12V
Operating Power	150mA–320mA @12V
Peak Power	320mA @12V

Tespro Electronics
https://www.tespro.com
Email: info@tespro.com / sales@tespro.com
Mobile/WhatsApp: +852-4609 4648, +1-213 610 4797, +86-13928019921
We have branches in China, the USA, the UK, Australia, Singapore, and Hong Kong. If you encounter any agents, please contact us first for verification.
© 2026 Tespro. All rights reserved. Product specifications are subject to change without notice.

Hardware Specifications

Category	TG-104
Environmental Conditions	
Operating Temperature	-40°C ~ +75°C
Operating Humidity	5% to 95% (non-condensing)
Storage Temperature	-40°C ~ +80°C
Mechanical Characteristics	
Dimensions	150 x 115 x 35 mm (including antenna connectors)
Protection Rating	IP30
Enclosure	Metal enclosure panel
Installation	DIN-rail / Wall-mounted
Cooling Method	Fanless cooling
Product Weight	450 g
Reliability	
Shock	IEC60068-2-27
Vibration	IEC60068-2-6
Drop	IEC60068-2-32
Certifications & Standards	
Regulatory Certifications	CE, RoHS
EMC Standards	EN 55032; EN 55035; EN IEC 61000-6-3:2021; EN IEC 61000-6-1:2019; EN 301 489-1; EN 301 489-17; EN 301 489-52
RF Standards	EN300328; EN301908-1/-13
SAR+Safety	EN50665; EN IEC62368-1
Cybersecurity	EN18031-1; EN18031-2
Electrostatic Discharge (ESD)	EN 61000-4-2:2009
Radiated Immunity	EN IEC 61000-4-3:2020
Electrical Fast Transient/Burst (EFT)	EN 61000-4-4:2012
Surge Immunity	EN 61000-4-5:2014 + A1:2017 (Ethernet ports)
Conducted Immunity	EN 61000-4-6:2014
Ring Wave Immunity	EN61000-4-12, level 3
Power-Frequency Magnetic Field Immunity	EN61000-4-8, horizontal/vertical 400 A/m (> level 2)

Tespro Electronics
https://www.tespro.com
Email: info@tespro.com / sales@tespro.com
Mobile/WhatsApp: +852-4609 4648, +1-213 610 4797, +86-13928019921
We have branches in China, the USA, the UK, Australia, Singapore, and Hong Kong. If you encounter any agents, please contact us first for verification.
© 2026 Tespro. All rights reserved. Product specifications are subject to change without notice.

Software Specifications

Category	TG-104
Industrial Protocols & Data Capabilities	
Industrial Protocols	Includes Modbus RTU, Modbus TCP, BACnet, M-Bus, OPC UA, and other protocols
Modbus	Modbus RTU, Modbus TCP
Industrial Device Protocols	PROFINET, EtherCAT, EtherNet (optional)
BACnet	BACnet
OPC UA	OPC UA
Meter Protocols	DLT 645-2007, IEC 1107, IEC 61850, IEC 62056-21, DLMS
DNP3	Supported modes: Station, Outstation; connection: TCP
DLMS/COSEM	DLMS
Custom Modbus Registers	Custom Modbus TCP register block requests; supports reading/writing files in the router, extending Modbus TCP client functionality
Supported Data Formats	INT/UINT (8/16/32-bit), 32-bit Float, HEX, ASCII; supports MSB/LSB and byte-order conversion (ABCD/DCBA/CDAB/BADC)
DTU Functions	Supports TCP/UDP transparent transmission; Modbus RTU-to-Modbus TCP conversion; DCTCP/DCUDP modes
Data to Server	Supports HTTP(S)/MQTT/Azure MQTT; multi-source data aggregation and reporting; customizable acquisition interval (minimum 1 s); supports custom Lua script extensions
Modbus / MQTT Gateway	Allows commands to be sent to a Modbus Server via an MQTT Broker and data to be received
API / Web API	Supports Web API; API endpoints are used to retrieve or modify data
Network Capabilities	
Network Access	2G / 3G / 4G cellular networks (or VPDN private network)
Access Authentication	Supports CHAP / PAP authentication
LAN Protocols	ARP, Ethernet
WAN Protocols	PPP, PPPoE, DHCP
Network Protocols	TCP, UDP, IPv4, IPv6, ICMP, NTP, DNS, HTTP, HTTPS, SFTP, FTP, SMTP, SSL/TLS, ARP, VRRP, PPP, PPPoE, UPNP, SSH, DHCP, Telnet, SMPP, SNMP, MQTT
Routing	Static routing, OSPF dynamic routing
NAT	DMZ, NAT, NAT-T, NAT64 (listed under Firewall)
DHCP	Static and dynamic IP assignment, DHCP relay, DHCP server configuration/status, and static leases; supports wildcard MAC addresses
Network Backup / Failover	Supports automatic failover between Cellular, Ethernet WAN, and Wi-Fi WAN; supports VRRP and ICMP probing
QoS	Traffic priority queuing based on source/destination, service, protocol, or port; WMM, 802.11e
IP Applications	Supports Ping, Trace, DHCP Server, DHCP Relay, DHCP Client, DNS relay, DDNS, Telnet
DNS / DDNS	Supports DoH (DNS over HTTPS), multiple DDNS provider configurations, and manual customization

Tespro Electronics
https://www.tespro.com
Email: info@tespro.com / sales@tespro.com
Mobile/WhatsApp: +852-4609 4648, +1-213 610 4797, +86-13928019921
We have branches in China, the USA, the UK, Australia, Singapore, and Hong Kong. If you encounter any agents, please contact us first for verification.
© 2026 Tespro. All rights reserved. Product specifications are subject to change without notice.

Software Specifications

Category	TG-104
Wi-Fi	
Wireless Mode	Wi-Fi 4：802.11b/g/n，Access Point(AP)、Station(STA)
Wi-Fi Security	WPA2-Enterprise/PSK、WPA-EAP/PSK、WPA3-SAE/EAP、OWE；AES-CCMP、TKIP、client separation、EAP-TLS、802.11w PMF，etc.
Wi-Fi Users	Wi-Fi 4: up to 30 simultaneous connections
Hotspot Relay	Forwards the Wi-Fi hotspot login page to downstream connected devices
SSID / ESSID	SSID stealth mode; MAC-address-based access control
Operating Modes	Supports AP, Client, and WDS modes
Security Features	Open System, Shared Key, WPA/WPA2 authentication; WEP/TKIP/AES encryption
Network Security & VPN	
Network Protection	Port forwarding / traffic rules / custom TTL; WebUI / CLI firewall configuration; DMZ, NAT / NAT-T / NAT64
Data Protection	Supports PPTP, L2TP, GRE, IPsec VPN, DMVPN, OpenVPN, WireGuard, and other VPN functions; supports digital certificate CA
Authentication	Pre-shared key / X.509 digital certificates, TACACS+, built-in / external RADIUS authentication, IP/time/login-attempt blocking, random password generator
Attack Protection	DDoS protection (SYN flood, SSH, HTTP/HTTPS attack protection); port-scan protection (SYN-FIN, SYN-RST, X-mas, NULL flags, FIN scan attacks)
VLAN	Port- and tag-based VLAN isolation
Access Control	Flexible access control for SSH, Web interface, CLI, and Telnet
Web Filter	Blacklist for unwanted websites; whitelist for allowed websites only
Certificate Management	Certificate generation tool for creating CA, server, client, Let's Encrypt, and SCEP certificates
OpenVPN	Supports multiple clients and one server running simultaneously; supports 27 encryption methods
IPsec	XFRM, IKEv1, IKEv2; 14 encryption methods for IPsec: 3DES, DES, AES128, AES192, AES256, AES128/192/256GCM8/12/16
WireGuard	Supports WireGuard VPN client and server
GRE	Supports GRE tunnels and GRE over IPsec tunnels
PPTP / L2TP	Client/Server instances can run simultaneously; supports L2TPv3 and L2TP over IPsec
DMVPN	Scalable IPsec VPN supporting Phase 2, Phase 3, and Dual Hub
SSTP	Supports SSTP client instances
ZeroTier	Supports ZeroTier VPN client
Stunnel	Proxy adds TLS encryption to existing clients and servers
Tinc	Encryption, authentication, and compression within tunnels; supports client and server modes
EoIP	Ethernet over IP tunnel based on GRE RFC 1701

Tespro Electronics
https://www.tespro.com
Email: info@tespro.com / sales@tespro.com
Mobile/WhatsApp: +852-4609 4648, +1-213 610 4797, +86-13928019921
We have branches in China, the USA, the UK, Australia, Singapore, and Hong Kong. If you encounter any agents, please contact us first for verification.
© 2026 Tespro. All rights reserved. Product specifications are subject to change without notice.

Software Specifications

Category	TG-104
Management & Platform	
Configuration Methods	Web UI, CLI, SSH, JSON-RPC, TesproOS, etc.
Cloud & IoT Platform Integration	Supports major global platforms: Google, Huawei, Amazon, Microsoft Cloud, iStarOS, Azure IoT Hub, other third-party cloud platforms, and custom clouds
FOTA	Firmware updates from server with automatic notifications
SNMP	SNMP (v1, v2, v3), SNMP Trap
MQTT	MQTT Broker, MQTT Publisher
JSON-RPC	HTTP/HTTPS-based management API
SSH	SSH (v1, v2)
Upgrade Methods	FOTA; Web UI
Logging	Event logs, system logs, kernel logs
Alarm Functions	Email message status alerts
On-Demand Dialing / Activation	On-demand dialing, data activation, SMS activation
Email	Receives email message status alerts from various services
Software System	
Operating System	TesproOS (Linux)
Supported Languages	BusyBox shell, Lua, C, C++, Python
Development Tools	SDK package including build environment
Custom Firmware / GPL Customization	Supports custom-branded firmware and Web page applications (colors, logo, etc.)
Package Management	Supports installation of additional software packages
Firmware & Configuration	
Web UI Upgrade	Update firmware from file; check firmware on server; configuration files; configuration backup
FOTA Upgrade	Firmware update
Cloud Batch Upgrade	Supports updating firmware/configuration on multiple devices at once through TesproOS
Upgrade While Retaining Configuration	Updates firmware without losing the current configuration
Factory Reset	Full factory reset, restoring all system settings including IP address, PIN code, and user data
Environment & Reliability	
Hot Standby / VRRP	VRRP (listed under Network Backup)
Link Connectivity Detection	Heartbeat detection; automatic reconnection after link disconnection
Dual-SIM Link Switching	Supports dual-SIM or dual-eSIM link switching
Embedded Watchdog	Device operation self-check with automatic fault recovery

Tespro Electronics
https://www.tespro.com
Email: info@tespro.com / sales@tespro.com
Mobile/WhatsApp: +852-4609 4648, +1-213 610 4797, +86-13928019921
We have branches in China, the USA, the UK, Australia, Singapore, and Hong Kong. If you encounter any agents, please contact us first for verification.

© 2026 Tespro. All rights reserved. Product specifications are subject to change without notice.

Interface Diagram

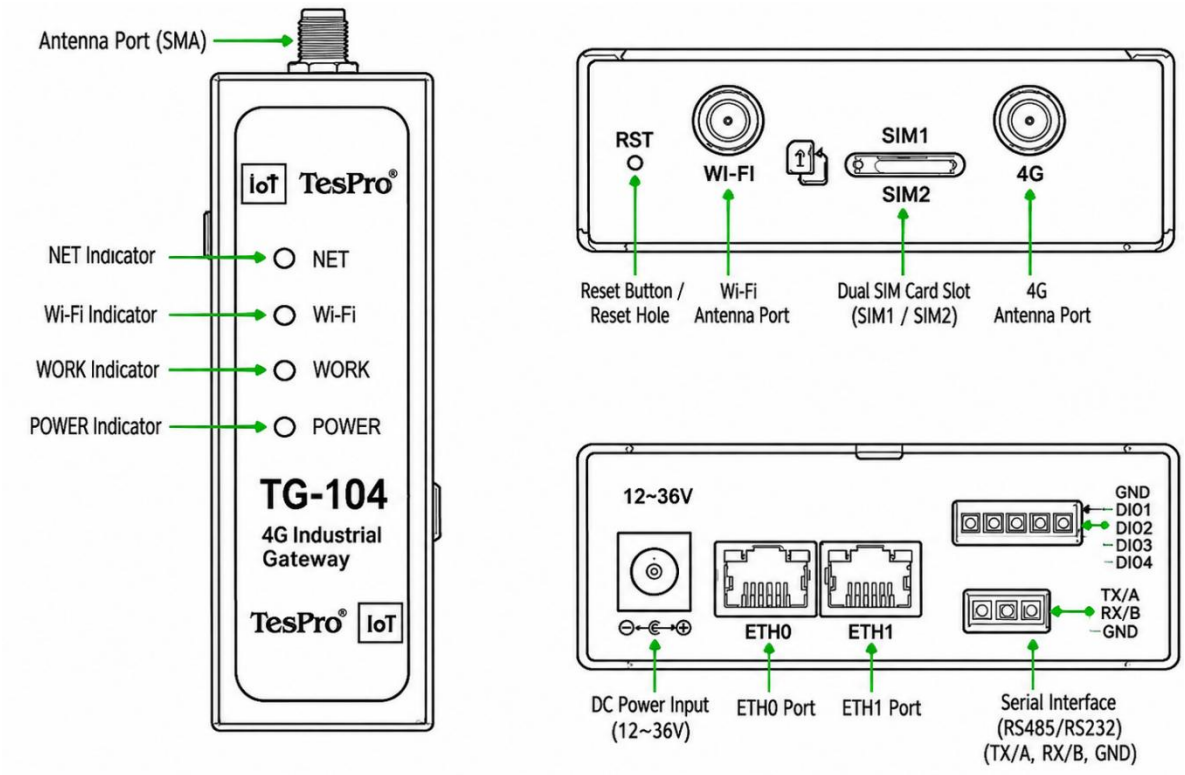

External dimensions

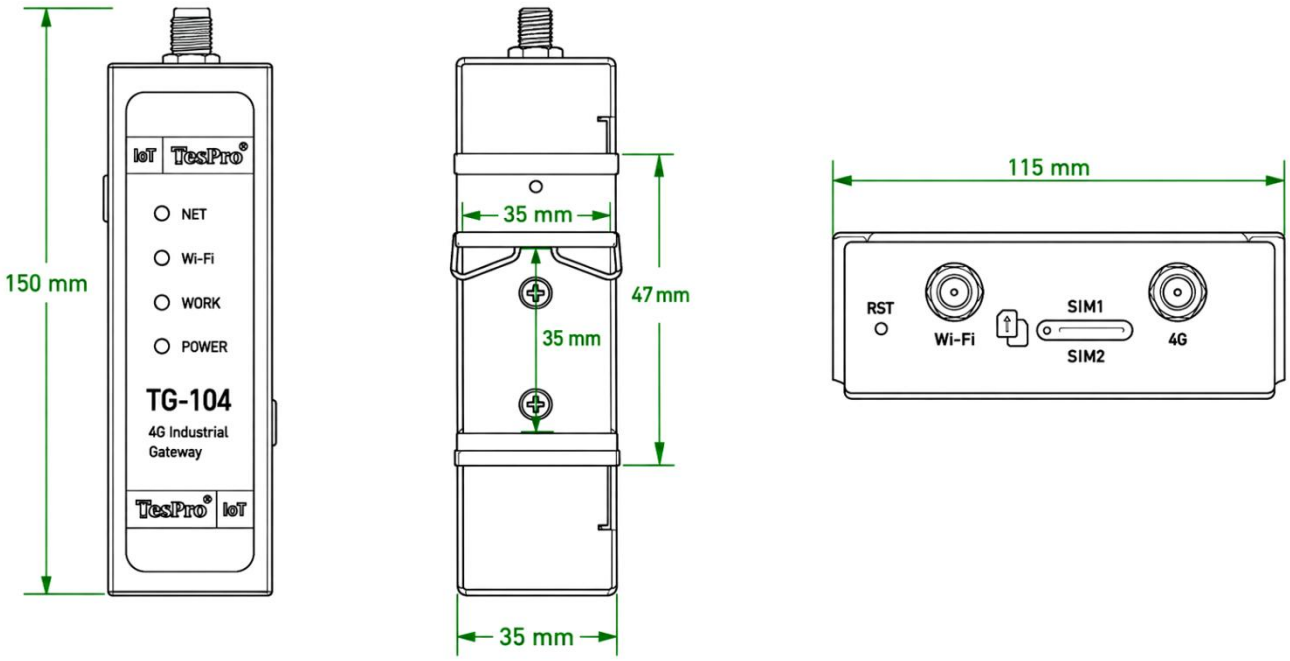

© 2026 Tespro. All rights reserved. Product specifications are subject to change without notice.

Accessories and Packaging

Accessories Information



TG-104 Series Industrial Gateway



Power Adapter



Cellular Antenna



Wi-Fi Antenna



Ethernet Cable (RJ45)



Quick Start Guide

Packaging Information



Package Dimensions

266 × 171 × 67 mm

Made with eco-friendly recyclable packaging materials, meeting green environmental requirements.

Product Selection

Product Model	Cellular Networks and Frequency Bands	Ethernet interface	Wi-Fi	Serial port
TG-104	4G LTE Cat1 / Cat4 LTE FDD: B1/3/5/7/8/20/28/71/66 LTE TDD: B38/40/41 WCDMA: B1/3/5/8	1*WAN + 1*LAN 10 / 100 Mbps	Wi-Fi 4: 802.11b/g/n	1*RS232 / 1*RS485 2*GPIO

About Tespro

Tespro is an industrial IoT manufacturer with 25 years of experience, specializing in AI computing, industrial IoT, power communication equipment, and software. Its products include industrial gateways, routers, DTUs, optical probes, testing instruments, and management platforms for energy, automation, smart buildings, and commercial applications. With branches in the U.S., U.K., Singapore, Hong Kong, and Zhuhai, Tespro serves 150+ countries and partners with Fortune Global 500 companies.

Global Office Locations

USA: 39 S Hayman Ave, Colorado Springs, CO 80910, US

UK: Flat 601 Ontario Tower, 4 Fairmont Avenue, London, UK, E14 9JA

Australia: 43 Tribeca Cct, North Lakes QLD, Australia 4509

Singapore: 3 Gambas Crescent, #04-01, Nordcom One, Singapore 757088

Hong Kong: Flat 602, 6/F, No. 2C Argyle Street, Mong Kok, Kowloon, HK

China: 2nd Floor, Liti Technology Building, No. 184 Bailian Road, Jida, Zhuhai City

Tespro Electronics
https://www.tespro.com
Email: info@tespro.com / sales@tespro.com
Mobile/WhatsApp: +852-4609 4648, +1-213 610 4797, +86-13928019921
We have branches in China, the USA, the UK, Australia, Singapore, and Hong Kong. If you encounter any agents, please contact us first for verification.

© 2026 Tespro. All rights reserved. Product specifications are subject to change without notice.